Iranian Journal of Reproductive Medicine Vol.4. No.1 pp:41-44, May 2006

Short communication

Androgen receptor gene trinucleotide repeats as a marker for tracing disease in a family with intersex patients

Mir Davood Omrani, M.D.
Uremia Medical Science University, Department of Genetic, Uremia, Iran.
Received: 23, November, 2005; accepted: 20, April, 2006

Abstract

Mutations of the androgen receptor (*AR*) gene give rise to a wide array of phenotypic abnormalities. Various mutations of the *AR* gene and expanded polyglutamine repeats (CAG) at exon 1 of the gene have been reported in patients with infertility and neurodegenerative diseases. However, the role of the *AR* gene trinucleotides repeats has not been systemically studied in those with hypospadias or genital ambiguity. In this study it was tried to find out the potential association between these repeats and sexual development in a family consisted of 10 persons including one girl with primary amenorrhea and two boys with severe hypospadias.

Mother was heterozygote for both CAG and GGN repeats. All affected children inherited the longer CAG and GGN repeat from their mother and all their healthy siblings inherited shorter CAG and GGN repeat. Only one girl had heterozygous situation like her mother.

Our results indicated that disease locus is in linkage disequilibrium with the CAG and GGN trinucleotide repeats in the *AR* gene.

Key words: *Androgen receptor gene, Infertility, CAG and GGN repeat, Hypospadias*

Introduction

Androgen insensitivity syndrome (AIS), is an X-linked recessive condition resulting in a failure of normal masculinization of the external genitalia in chromosomally male individuals (1, 2). This failure of virilization can be either complete androgen insensitivity syndrome (CAIS) or partial androgen insensitivity syndrome (PAIS), depending on the amount of residual receptor function. Both individuals with PAIS with CAIS have 46, XY karyotype (3). Individuals with CAIS have female external genitalia with normal labia, clitoris, and vaginal introitus. The phenotype of individuals with PAIS may range from mildly virilized female external genitalia (clitoromegaly without other external anomalies) to mildly undervirilized male external genitalia (hypospadias and/or diminished penile size). In either case, affected individuals have normal testes with normal production of testosterone and normal conversion to dihydrotestosterone (DHT), which differentiates this disease from 5-alpha reductase deficiency (4). Because the testes produce normal amounts of müllerian-inhibiting factor (MIF), also known as müllerian-inhibiting substance (MIS) or anti-müllerian hormone/factor (AMH/AMF), affected individuals do not have fallopian tubes, a uterus, or a proximal (upper) vagina. The basic etiology of AIS is a loss-of-function mutation in the androgen receptor (*AR*) gene. The best available data suggest an AIS incidence of approximately 1 case per 20,400 live born males (3, 4). The *AR* gene is located on chromosome Xq11-12. The gene is oriented with the 5' end toward the centromere and spans ~90 kb of DNA containing eight exons that code for a 2,757 base pairs open reading frame within a 10.6 kb mRNA (4, 5). The *AR* gene is composed of three different functional domains; an N-terminal transactivating domain, a central DNA-binding domain and a C-terminal ligand-binding domain (6-8). The N-terminal transactivating domain is highly variable, due to two polymorphic amino acid stretches (3,6,8). The most amino terminal of these is a polyglutamine stretch, that begins at codon 58 and encoded by $(CAG)_n$ CAA. Further downstream, a polyglycine stretch encoded by

Correspondence Author:
Dr. Mir Davood Omrani, Mottahary hospital, Kashani Ave, Uremia, Iran.
Email: davood_omrani@umsu.ac.ir

[Downloaded from ijrm.ir on 2024-10-12]

$(GGT)_3$ GGG $(GGT)_2$ $(GGC)_n$ is present. This repeat is generally designated the GGN repeat (6-9).

The CAG repeat region is present in primate *AR* genes, and its length decreases with evolutionary distance from humans, which suggests that the CAG repeat region may have developmental or behavioral implications for the most advanced species (10). The range of CAG repeat length is 14 to 35 repeats in a group of males and may vary somewhat with ethnicity and race (11-12). The length of the CAG repeat unit can affect *AR* activity and influences prostate cancer risk. However, the *AR* gene mutations are infrequent in hypospadias, and it remains uncertain whether the CAG repeat lengths are expanded in other patient populations with hypospadias. Therefore in this study it was tried systematically to screen all the potential genes involving in sexual differentiation like *AR, LH, SRD5A2, 17 B HSD* and *SRY* genes and find out the role of these genes in the development of the symptoms in this family. The family consisted of 10 persons including one girl with primary amenorrhea and two boys with severe hypospadias. The parents are non consanguineous.

Patient 1 (II-3; Fig. 1) is a 27 years old woman of a sib ship of eight. She had a normal female external genital phenotype associated with primary amenorrhea and were diagnosed clinically as CAIS. She was born at term after a normal pregnancy and delivery. Birth weight was 3,800 g. She had a 46, XY male karyotype.

Patient 2 (II-4; Fig. 1) is a 15 years old boy with perinal hypospadiasis, severe chordee, bifida scrotum and small and hard testis. He was born at term after an uneventful pregnancy and delivery. His birth weight was 4,300 g. Semen analysis revealed azoospermia and the semen volume was 3.75 ml. Serum follicle stimulating hormone (FSH), luteinizing hormone (LH), testosterone and prolactin were in normal range. Result of chromosome analysis was normal (46, XY).

Patient 3(II-8; Fig. 1) is a 19 years old man with penoscrotal hypospadias, moderate chordee and normal scrotum and testis size. Semen analysis revealed azoospermia and the semen volume was 3.75 ml. Serum FSH, LH, testosterone and prolactin were in normal range. Result of chromosome analysis was normal (46, XY).

Informed consent was obtained from all subjects or their parents, according to protocol of ethical review board of Uremia University.

Genomic DNA was obtained from peripheral leukocytes using the Nucleon Kit II (Scotlab, Wiesloch, Germany). Primers for all the exons of *AR, LH, SRDA2, 17B HSD* and *SRY* genes were designed using the web-based Primer 3 program by standard selection criteria. The average size of fragments was between 180 and 350 bp. PCR reactions were performed with AmpliTaq Gold (Applied Biosystems) or Platinum® taq (Invitrogen) for CG-rich regions, using standard protocols.

PCR amplicons were purified using the QIAquick PCR Purification Kit (Qiagen, Valencia, Ca.). DNA concentration was determined by spectrophotometry. Cycle sequencing extension products were created in a final volume 20 µl reaction using 12.5 µl H_2O, 0.5µl forward or reverse primer at 10 ug/ml, 0.5 µl template DNA, 4 µl Big Dye Terminator Ready Reaction mix V1.1 (PE-ABI, Foster City, Ca.) and 2 µl 5X Big dye buffer. Cycle sequencing conditions consisted of an initial denaturation step at 96°C for 1 minute followed by 25 cycles of 96°C for 10 s, 50°C for 5 s, and 60°C for 4 minutes. Unincorporated dye and other contaminants were removed with ethanol precipitation procedure.

Eight exons of *AR* gene were initially sequenced without finding any mutations. Therefore other genes involved in the process of sex determination such as 5 alfa reducatase (*SRD5A2*), 17 *B HSD, LH* receptor and *SRY* genes, were sequenced and analyzed. The 46, XY girl was positive for SRY gene but no anomalies were identified in the screened genes. The CAG repeat loci and GGN repeat loci located in exon 1 of the *AR* gene were amplified by PCR, and exact numbers of repeats were calculated by direct sequencing of the PCR fragments. Results showed that the mother was heterozygous for both repeats. CAG repeats were 25 and 20 and GGN repeats were 18 and 17 respectively. All affected children including 46, XY female and her two affected brother with hypospadias condition were inherited the 25 and 18 CAG and GGN repeats from their mother. But the entire healthy sibling except one girl inherited the shorter CAG and GGN repeat from their mother. One girl is heterozygous carrier like her mother.

[Downloaded from ijrm.ir on 2024-10-12]

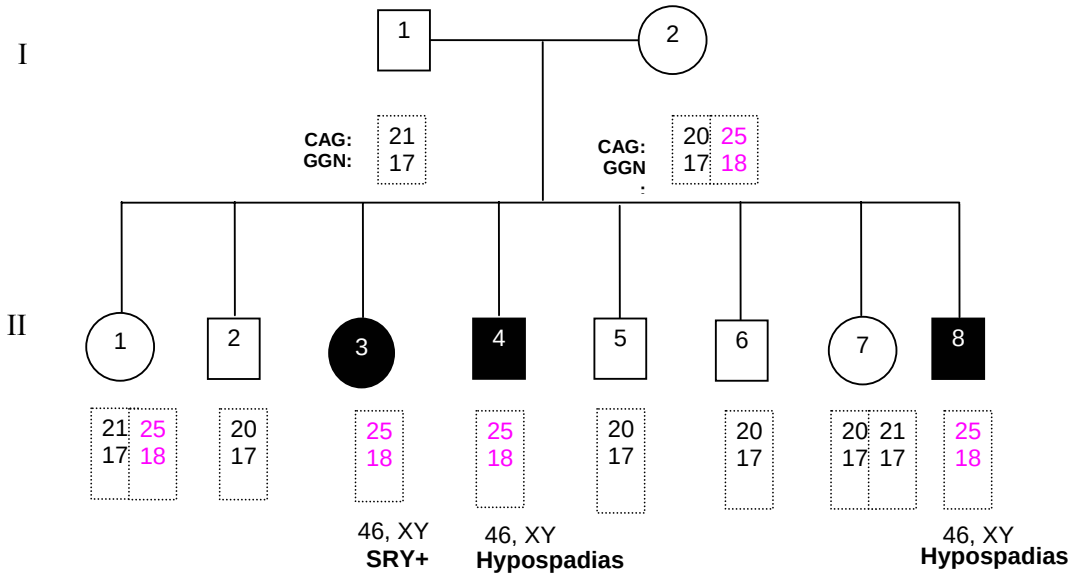

Figure 1. The pedigree and haplotype of the family. Entire affected and carrier siblings inherited 25 and 18 CAG and GGN trinuclotide repeats respectively.

Discussion

The phenotypic characteristic of our patients in this study is somewhat reminiscent of androgen receptor insensitivity syndrome but screening of this gene could not confirm that. Therefore other related genes in the sex determination process, 5 alfa reductase gene (*SRD5A2), LH* receptor gene and *17 B HSD* genes, were also checked, but no anomalies were identified. The only interesting finding was the slight extension of CAG and GGN repeats in *AR* exon1 of the affected individuals. It is unclear how a longer CAG and GGN repeats in the *AR* gene might cause the phenotype of CAIS or hypospadias in the family. It has been demonstrated that the antagonist of androgen. Estrogen may influence learning and memory and in general may have an impact on behavior (13). Therefore, a causative relationship between a long CAG repeat in the *AR* gene and the patients' phenotype may not be excluded.

Our study showed there is a linkage between longer CAG and GGN repeats and intersex condition. According to the pedigree and haplotype results, it is most likely that the disease is inherited in X-Linked pattern and every children has 50% chance of inheriting mother's affected X-chromosome. Therefore if this chance were added in all affected and carrier children's, a lod score of 2.4 can be calculated in favorite of linkage. Of course if there was other XY female in maternal sib the lod score would be higher, but unfortunately the family did not cooperate in this regard. In addition our findings showed since there is a tight linkage between disease locus and this repeat; therefore it is possible to use it for prenatal diagnosis or pre-implantation genetic diagnosis (PGD) specially in the carrier girl.

Studies of families with longer CAG repeats are needed to show whether genetic anticipation occurs, as this has been shown in other genetic diseases associated with trinucleotide repeat expansions (14-16).

Our data imply that a moderate expansion of the CAG repeat region has a modulating effect on androgen-receptor function, whereas expansion beyond a threshold (>40) is likely trigger a separate process that involves neurotoxicity as well. Study of heritability of androgen-receptor defects in individuals who present with a pre-expanded CAG repeat segment is needed, to see whether the repeat will continue to expand in their offspring and thus contribute to the spread and increase in incidence and severity of intersex condition or of neurological disorders such as spinal and bulbar muscular atrophy.

Acknowledgments

Many thanks to the family for their cooperation in the study and also we would like to express our thanks to Dr. Agneta Nordenkjold and Ingrid Kokum for their technical help and all people in the Karolinska university hospital routine labs for giving us this opportunity to do all the sequencing reactions there.

[Downloaded from ijrm.ir on 2024-10-12]

Reference

1. Kučinskas L, Just W. Human male sex determination and sexual differentiation: pathways, molecular interactions and genetic disorders. *Medicina* 2005; 41(8): 633-640.
2. Gelmann EP. Androgen receptor mutations in prostate cancer. *Cancer Treat Res* 1996; 87: 285-302.
3. Chang C, Saltzman A, Yeh S, Young W, Keller E, Lee HJ, *et al.* Androgen receptor: An overview. *Crit Rev Eukaryot Gene Expr* 1995; 5: 97-125.
4. Zhou ZX, Wong CI, Sar M, Wilson EM. The androgen receptor: An overview. *Recent Prog Horm Res* 1994; 49: 249-274.
5. Lindzey J, Kumar MV, Grossman M, Young C, Tindall DJ. Molecular mechanisms of androgen action. *Vitam Horm* 1994; 49: 383-432.
6. Lubahn DB, Brown TR, Simental JA, Higgs HN, Migeon CJ, Wilson EM, *et al*. Sequence of the intron/exon junctions of the coding region of the human androgen receptor gene and identification of a point mutation in a family with complete androgen insensitivity. *Proc Natl Acad Sci USA* 1989; 86: 9534-9538.
7. Kuiper GG, Faber PW, van Rooij HC, van der Korput JA, Ris-Stalpers C, Klaassen P, *et al.* Structural organization of the human androgen receptor gene. *J Mol Endocrinol* 1989; 2: R1-R4.
8. Faber PW, van Rooij HC, Schipper HJ, Brinkmann AO, Trapman J. Two different, overlapping pathways of transcription initiation are active on the TATA-less human androgen receptor promoter: The role of Sp1. *J Biol Chem* 1993; 268: 9296-9301.
9. La Spada AR, Wilson EM, Lubahn DB, Harding AE, Fischbech KH. Androgen receptor gene mutations in X-linked spinal and bulbar muscular atrophy. *Nature* 1991; 352: 77-79.
10. Choong CS, Kemppainen JA, Wilson EM. Evolution of the primate androgen receptor: A structural basis for disease. *J Mol Evol* 1998; 47: 334-342.
11. Macke JP, Hu N, Hu S, Bailey M, King VL, Brown T, *et al.* Sequence variation in the androgen receptor gene is not a common determinant of male sexual orientation. *Am J Hum Genet* 1993; 53: 844-852.
12. Sartor O, Zheng Q, Eastham JA. Androgen receptor gene CAG repeat length varies in a race-specific fashion in men without prostate cancer. *Urology* 1999; 53: 378-380.
13. Wickelgren L. Estrogen stakes claim to cognition. *Science* 1997; 276(5313):675-678.
14. Rubin LL, Gatchalian CL, Rimon G, Brooks SF. The molecular mechanisms of neuronal apoptosis. *Curr Opin Neurobiol* 1994; 4: 696-702.
15. de Cristofaro T, Affaitati A, Feliciello A, Avvedimento EV, Varrone S. Polyglutamine-mediated aggregation and cell death. *Biochem Biophys Res Commun* 2000; 272: 816-821.
16. Abel A, Walcott J, Woods J, Duda J, Merry DE. Expression of expanded repeat androgen receptor produces neurologic disease in transgenic mice. *Hum Mol Genet* 2001; 10(2):107-1.

[Downloaded from ijrm.ir on 2024-10-12]